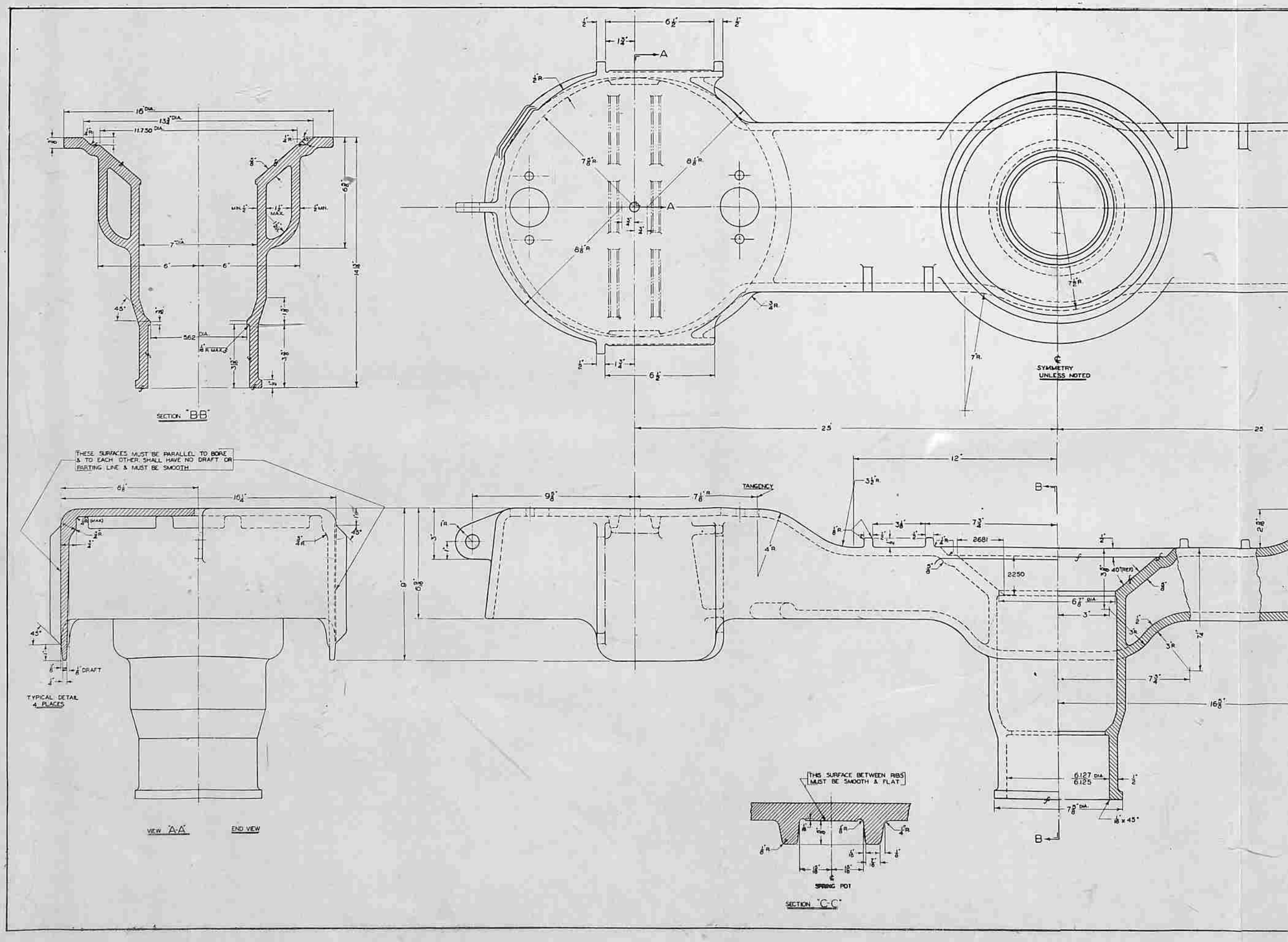
SECTION "BB"
THESE SURFACES MUST BE PARALLEL TO BORE & TO EACH OTHER, SHALL HAVE NO DRAFT OR PARTING LINE & MUST BE SMOOTH
TYPICAL DETAIL 4 PLACES
VIEW "A-A"
END VIEW
TANGENCY
SYMMETRY UNLESS NOTED
THIS SURFACE BETWEEN RIBS MUST BE SMOOTH & FLAT
SPRING POT
SECTION "C-C"

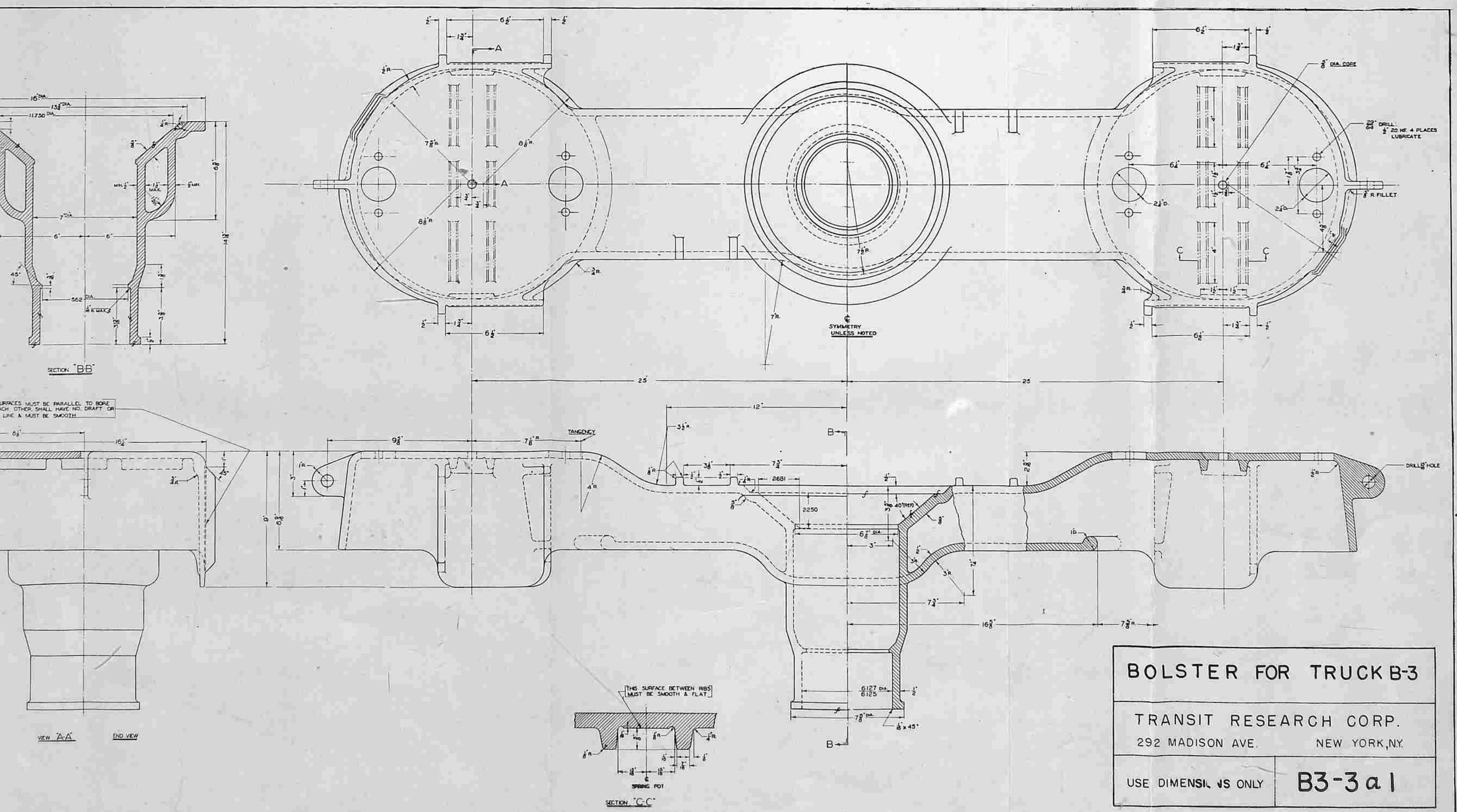
SECTION "B-B"
SURFACES MUST BE PARALLEL TO BORE
EACH OTHER SHALL HAVE NO DRAFT OR
LINE & MUST BE SMOOTH
VIEW "A-A"
END VIEW
TANGENCY
SYMMETRY
UNLESS NOTED
THIS SURFACE BETWEEN RIBS
MUST BE SMOOTH & FLAT
SPRING POT
SECTION "C-C"
DRILL 5/8" HOLE
5/8" DIA. CORE
29/64" DRILL
1/2" 20 NF 4 PLACES
LUBRICATE
5/8" R. FILLET
BOLSTER FOR TRUCK B-3
TRANSIT RESEARCH CORP.
292 MADISON AVE.
NEW YORK, N.Y.
USE DIMENSIONS ONLY
B3-3a1